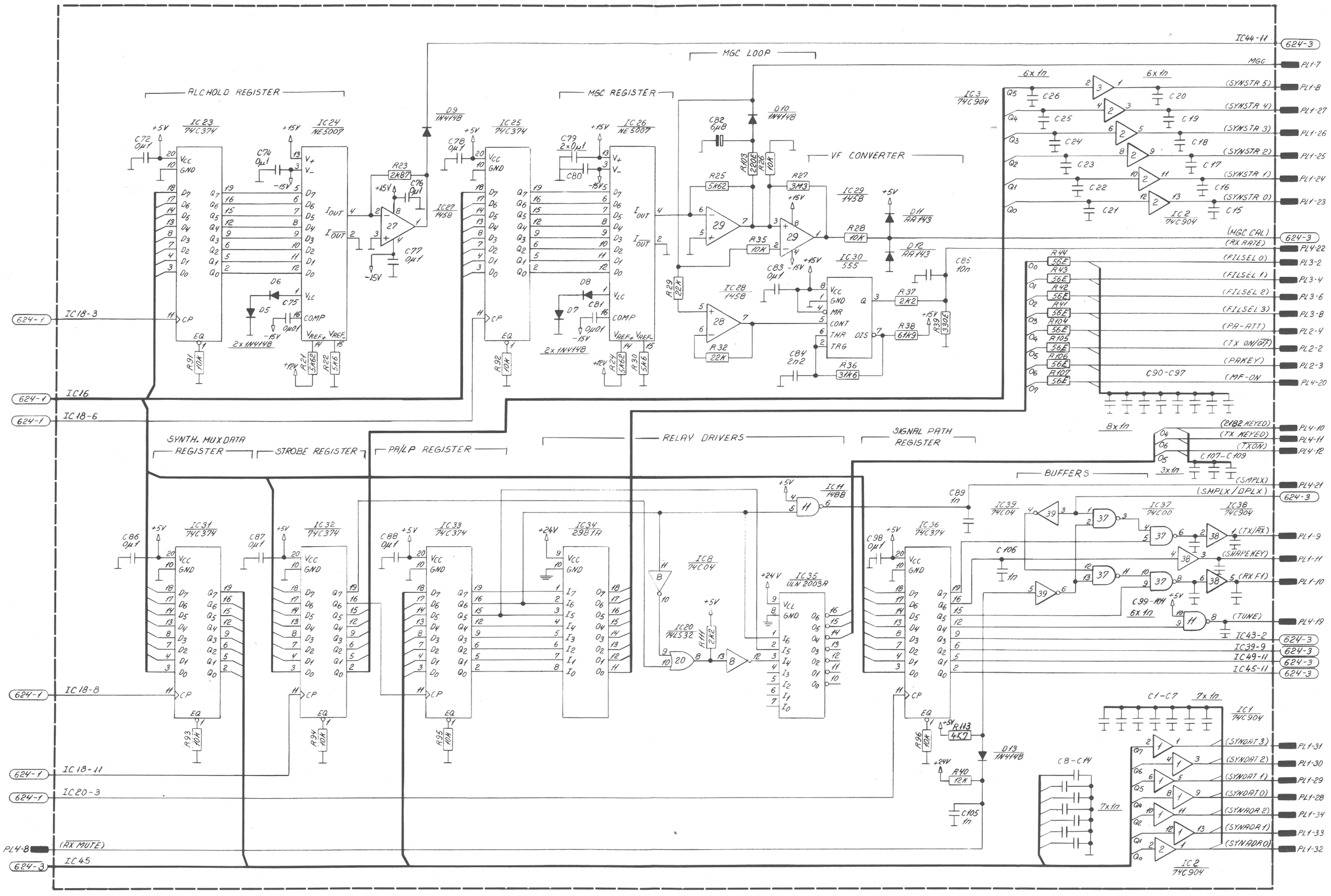

624 SUB DIAGRAM 2 VERSION 4A